International
IOR Rectifier

PD - 97213C

IRFB3207ZPbF
IRFS3207ZPbF
IRFSL3207ZPbF

HEXFET® Power MOSFET

Applications

- High Efficiency Synchronous Rectification in SMPS
- Uninterruptible Power Supply
- High Speed Power Switching
- Hard Switched and High Frequency Circuits

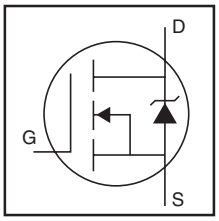

V_{DSS}		75V
$R_{DS(on)}$	typ.	3.3mΩ
	max.	4.1mΩ
$I_{D\ (Silicon\ Limited)}$		170A①
$I_{D\ (Package\ Limited)}$		120A

Benefits

- Improved Gate, Avalanche and Dynamic dv/dt Ruggedness
- Fully Characterized Capacitance and Avalanche SOA
- Enhanced body diode dV/dt and dI/dt Capability

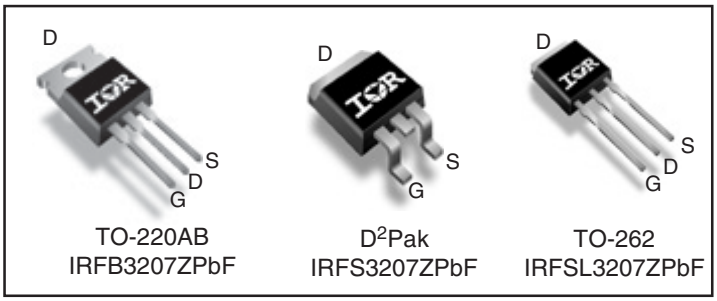

TO-220AB IRFB3207ZPbF | D^2Pak IRFS3207ZPbF | TO-262 IRFSL3207ZPbF

G	D	S
Gate	Drain	Source

Absolute Maximum Ratings

Symbol	Parameter	Max.	Units
I_D @ T_C = 25°C	Continuous Drain Current, VGS @ 10V (Silicon Limited)	170①	A
I_D @ T_C = 100°C	Continuous Drain Current, V_{GS} @ 10V (Silicon Limited)	120①	
I_D @ T_C = 25°C	Continuous Drain Current, V_{GS} @ 10V (Wire Bond Limited)	120	
I_{DM}	Pulsed Drain Current ②	670	
P_D @T_C = 25°C	Maximum Power Dissipation	300	W
	Linear Derating Factor	2.0	W/°C
V_{GS}	Gate-to-Source Voltage	± 20	V
dv/dt	Peak Diode Recovery ④	16	V/ns
T_J T_{STG}	Operating Junction and Storage Temperature Range	-55 to + 175	°C
	Soldering Temperature, for 10 seconds (1.6mm from case)	300	
	Mounting torque, 6-32 or M3 screw	10lb·in (1.1N·m)	

Avalanche Characteristics

$E_{AS\ (Thermally\ limited)}$	Single Pulse Avalanche Energy ③	170	mJ
I_{AR}	Avalanche Current ②	See Fig. 14, 15, 22a, 22b	A
E_{AR}	Repetitive Avalanche Energy ⑤		mJ

Thermal Resistance

Symbol	Parameter	Typ.	Max.	Units
$R_{\theta JC}$	Junction-to-Case ⑨	——	0.50	°C/W
$R_{\theta CS}$	Case-to-Sink, Flat Greased Surface , TO-220	0.50	——	
$R_{\theta JA}$	Junction-to-Ambient, TO-220 ⑨	——	62	
$R_{\theta JA}$	Junction-to-Ambient (PCB Mount) , D^2Pak ⑧⑨	——	40	

04/07/08

Static @ T_J = 25°C (unless otherwise specified)

Symbol	Parameter	Min.	Typ.	Max.	Units	Conditions
$V_{(BR)DSS}$	Drain-to-Source Breakdown Voltage	75	—	—	V	V_{GS} = 0V, I_D = 250μA
$\Delta V_{(BR)DSS}/\Delta T_J$	Breakdown Voltage Temp. Coefficient	—	0.091	—	V/°C	Reference to 25°C, I_D = 5mA②
$R_{DS(on)}$	Static Drain-to-Source On-Resistance	—	3.3	4.1	mΩ	V_{GS} = 10V, I_D = 75A ⑤
$V_{GS(th)}$	Gate Threshold Voltage	2.0	—	4.0	V	V_{DS} = V_{GS}, I_D = 150μA
$R_{G(int)}$	Internal Gate Resistance	—	0.80	—	Ω	
I_{DSS}	Drain-to-Source Leakage Current	—	—	20	μA	V_{DS} = 75V, V_{GS} = 0V
		—	—	250		V_{DS} = 75V, V_{GS} = 0V, T_J = 125°C
I_{GSS}	Gate-to-Source Forward Leakage	—	—	100	nA	V_{GS} = 20V
	Gate-to-Source Reverse Leakage	—	—	-100		V_{GS} = -20V

Dynamic @ T_J = 25°C (unless otherwise specified)

Symbol	Parameter	Min.	Typ.	Max.	Units	Conditions
gfs	Forward Transconductance	280	—	—	S	V_{DS} = 50V, I_D = 75A
Q_g	Total Gate Charge	—	120	170	nC	I_D = 75A
Q_{gs}	Gate-to-Source Charge	—	27	—		V_{DS} = 38V
Q_{gd}	Gate-to-Drain ("Miller") Charge	—	33	—		V_{GS} = 10V ⑤
Q_{sync}	Total Gate Charge Sync. (Q_g - Q_{gd})	—	87	—		I_D = 75A, V_{DS} =0V, V_{GS} = 10V
$t_{d(on)}$	Turn-On Delay Time	—	20	—	ns	V_{DD} = 49V
t_r	Rise Time	—	68	—		I_D = 75A
$t_{d(off)}$	Turn-Off Delay Time	—	55	—		R_G = 2.7Ω
t_f	Fall Time	—	68	—		V_{GS} = 10V ⑤
C_{iss}	Input Capacitance	—	6920	—	pF	V_{GS} = 0V
C_{oss}	Output Capacitance	—	600	—		V_{DS} = 50V
C_{rss}	Reverse Transfer Capacitance	—	270	—		f = 1.0MHz
C_{oss} eff. (ER)	Effective Output Capacitance (Energy Related)⑦	—	770	—		V_{GS} = 0V, V_{DS} = 0V to 60V ⑧
C_{oss} eff. (TR)	Effective Output Capacitance (Time Related)⑥	—	960	—		V_{GS} = 0V, V_{DS} = 0V to 60V ⑥

Diode Characteristics

Symbol	Parameter	Min.	Typ.	Max.	Units	Conditions
I_S	Continuous Source Current (Body Diode)	—	—	170①	A	MOSFET symbol showing the integral reverse p-n junction diode. 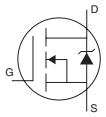
I_{SM}	Pulsed Source Current (Body Diode) ②⑦	—	—	670		
V_{SD}	Diode Forward Voltage	—	—	1.3	V	T_J = 25°C, I_S = 75A, V_{GS} = 0V ⑤
t_{rr}	Reverse Recovery Time	—	36	54	ns	T_J = 25°C V_R = 64V,
		—	41	62		T_J = 125°C I_F = 75A
Q_{rr}	Reverse Recovery Charge	—	50	75	nC	T_J = 25°C di/dt = 100A/μs ⑤
		—	67	100		T_J = 125°C
I_{RRM}	Reverse Recovery Current	—	2.4	—	A	T_J = 25°C
t_{on}	Forward Turn-On Time	Intrinsic turn-on time is negligible (turn-on is dominated by LS+LD)				

Notes:

① Calculated continuous current based on maximum allowable junction temperature. Bond wire current limit is 120A. Note that current limitations arising from heating of the device leads may occur with some lead mounting arrangements.

② Repetitive rating; pulse width limited by max. junction temperature.

③ Limited by T_{Jmax}, starting T_J = 25°C, L = 0.033mH R_G = 25Ω, I_{AS} = 102A, V_{GS} =10V. Part not recommended for use above this value.

④ $I_{SD} \leq$ 75A, di/dt $\leq$ 1730A/μs, $V_{DD} \leq V_{(BR)DSS}$, $T_J \leq$ 175°C.

⑤ Pulse width $\leq$ 400μs; duty cycle $\leq$ 2%.

⑥ C_{oss} eff. (TR) is a fixed capacitance that gives the same charging time as C_{oss} while V_{DS} is rising from 0 to 80% V_{DSS}.

⑦ C_{oss} eff. (ER) is a fixed capacitance that gives the same energy as C_{oss} while V_{DS} is rising from 0 to 80% V_{DSS}.

⑧ When mounted on 1" square PCB (FR-4 or G-10 Material). For recom mended footprint and soldering techniques refer to application note #AN-994.

⑨ R_θ is measured at T_J approximately 90°C.

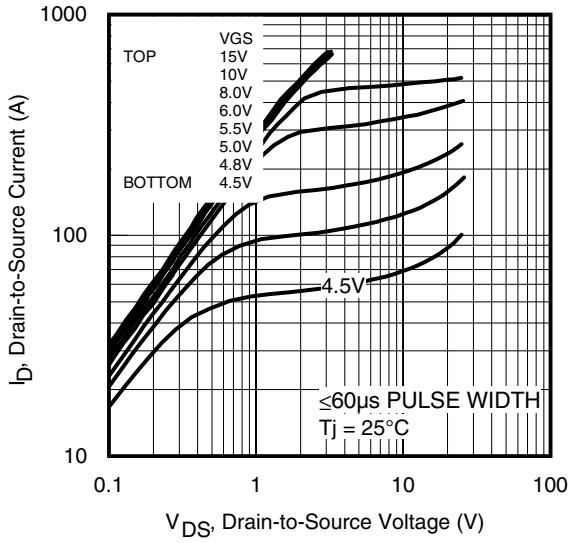

Fig 1. Typical Output Characteristics

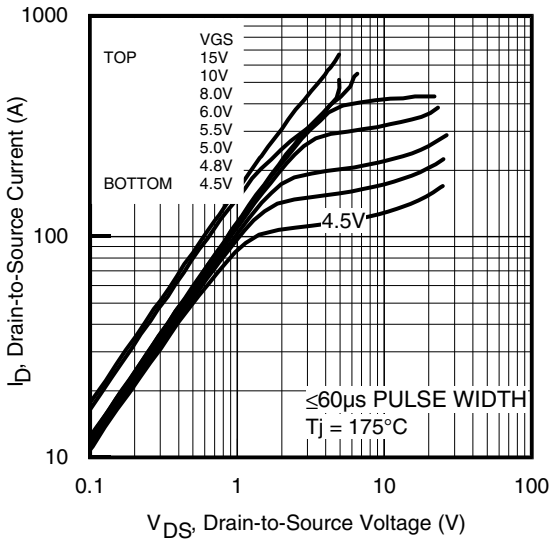

Fig 2. Typical Output Characteristics

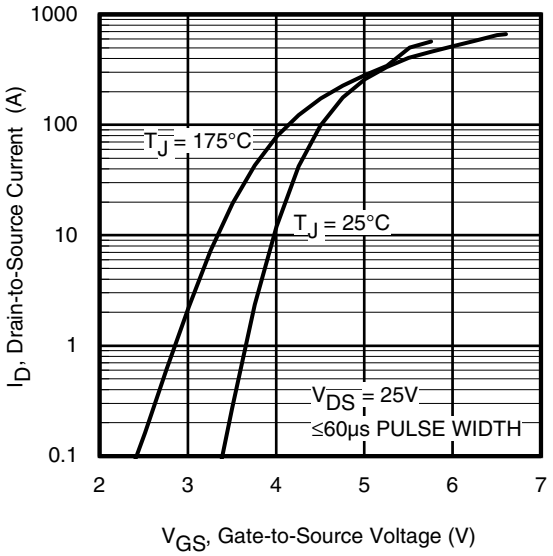

Fig 3. Typical Transfer Characteristics

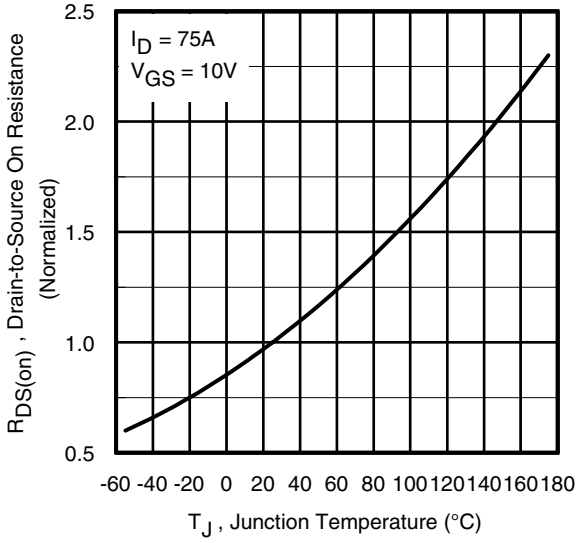

Fig 4. Normalized On-Resistance vs. Temperature

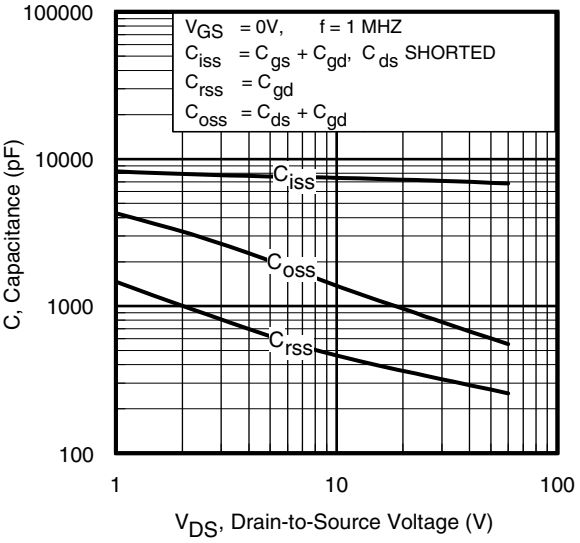

Fig 5. Typical Capacitance vs. Drain-to-Source Voltage

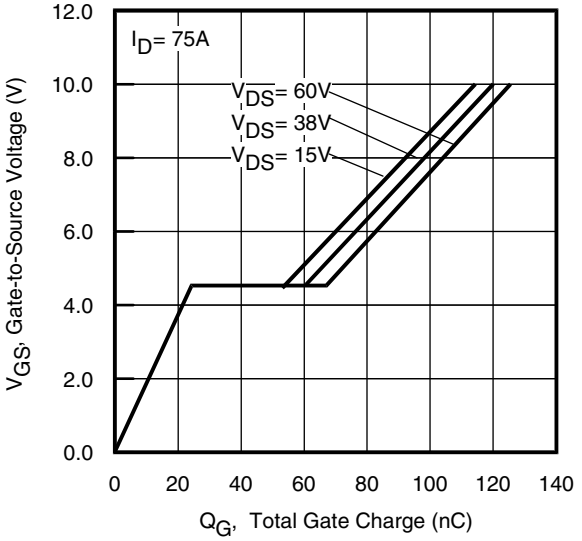

Fig 6. Typical Gate Charge vs. Gate-to-Source Voltage

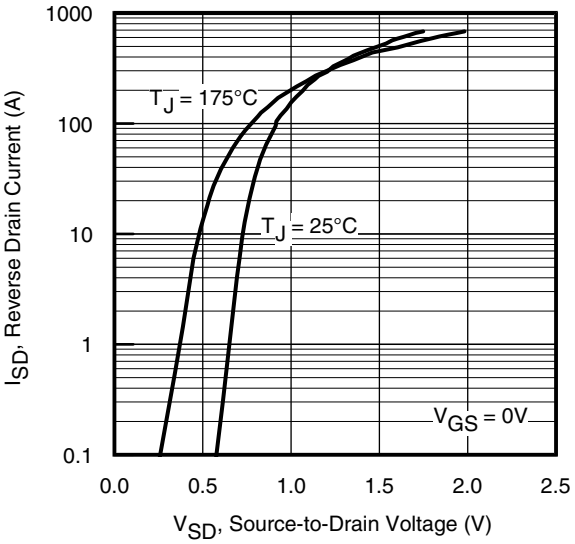

Fig 7. Typical Source-Drain Diode Forward Voltage

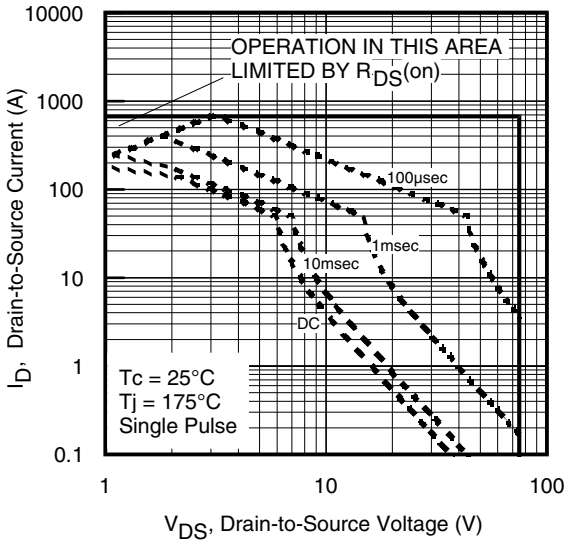

Fig 8. Maximum Safe Operating Area

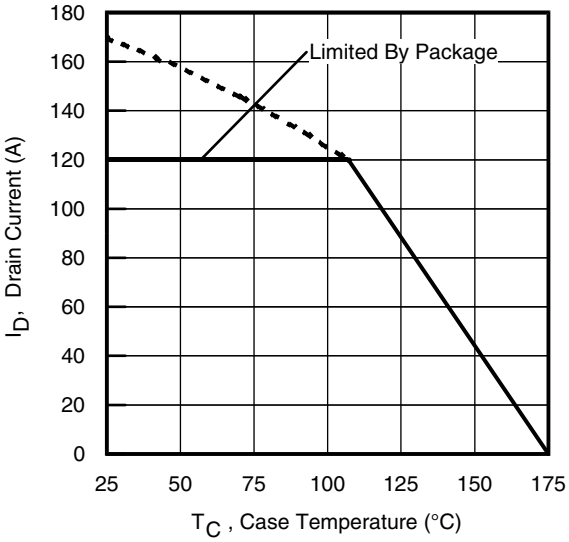

Fig 9. Maximum Drain Current vs. Case Temperature

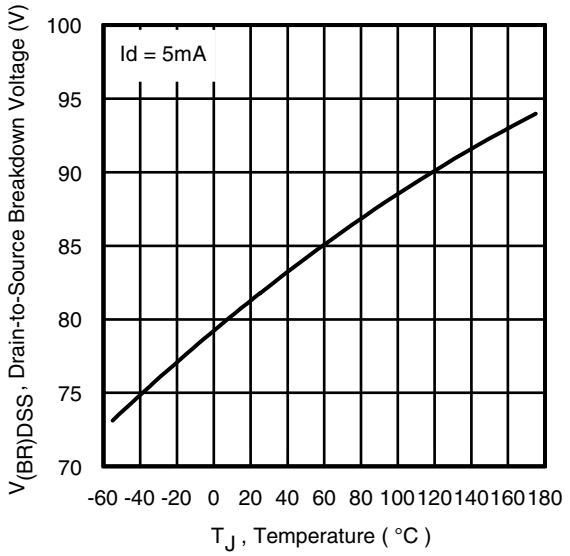

Fig 10. Drain-to-Source Breakdown Voltage

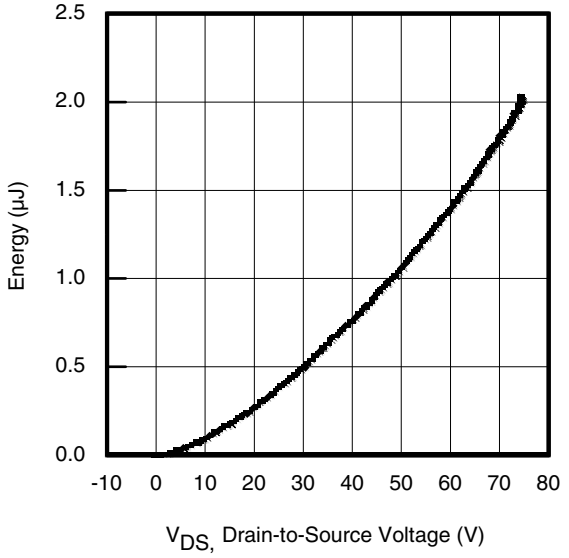

Fig 11. Typical C_{OSS} Stored Energy

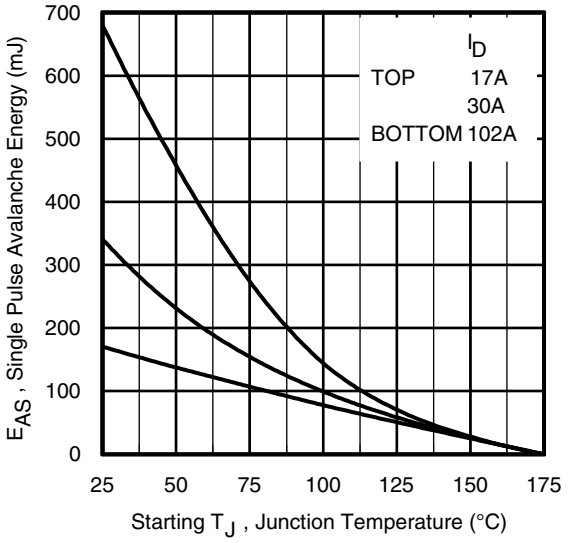

Fig 12. Maximum Avalanche Energy vs. DrainCurrent

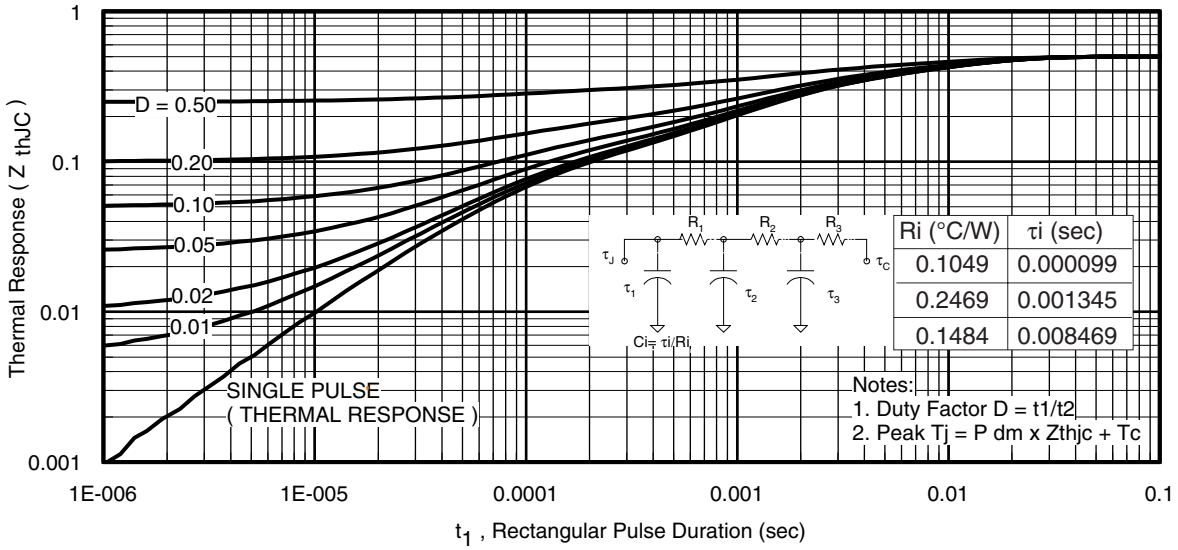

Fig 13. Maximum Effective Transient Thermal Impedance, Junction-to-Case

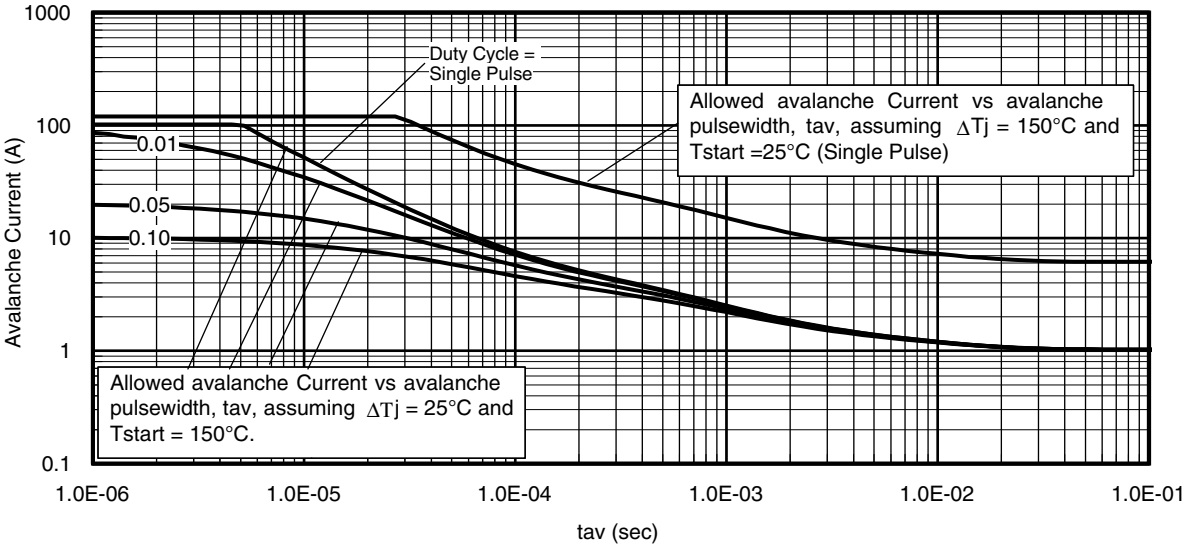

Fig 14. Typical Avalanche Current vs.Pulsewidth

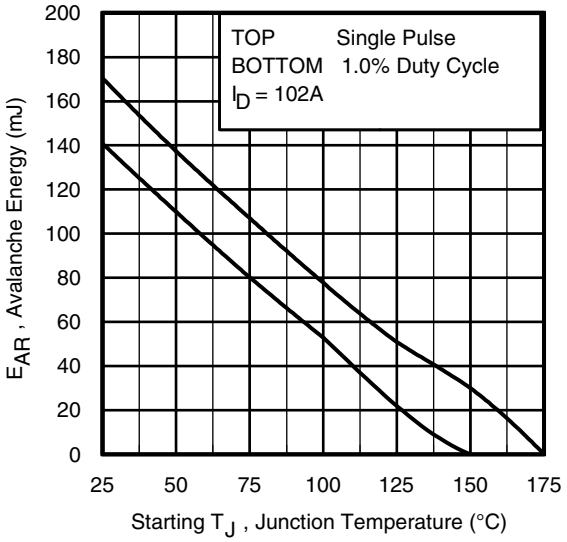

Fig 15. Maximum Avalanche Energy vs. Temperature

Notes on Repetitive Avalanche Curves , Figures 14, 15:
(For further info, see AN-1005 at www.irf.com)

1. Avalanche failures assumption:
   Purely a thermal phenomenon and failure occurs at a temperature far in excess of T_{jmax}. This is validated for every part type.
2. Safe operation in Avalanche is allowed as long as T_{jmax} is not exceeded.
3. Equation below based on circuit and waveforms shown in Figures 16a, 16b.
4. $P_{D\ (ave)}$ = Average power dissipation per single avalanche pulse.
5. BV = Rated breakdown voltage (1.3 factor accounts for voltage increase during avalanche).
6. I_{av} = Allowable avalanche current.
7. ΔT = Allowable rise in junction temperature, not to exceed T_{jmax} (assumed as 25°C in Figure 14, 15).
   t_{av} = Average time in avalanche.
   D = Duty cycle in avalanche = $t_{av} \cdot f$
   $Z_{thJC}(D, t_{av})$ = Transient thermal resistance, see Figures 13)

$$P_{D\ (ave)} = 1/2\ (1.3 \cdot BV \cdot I_{av}) = \Delta T / Z_{thJC}$$
$$I_{av} = 2\Delta T / [1.3 \cdot BV \cdot Z_{th}]$$
$$E_{AS\ (AR)} = P_{D\ (ave)} \cdot t_{av}$$

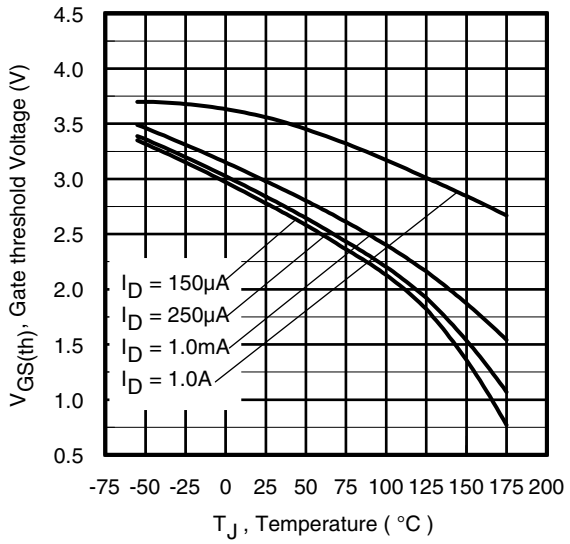

Fig 16. Threshold Voltage vs. Temperature

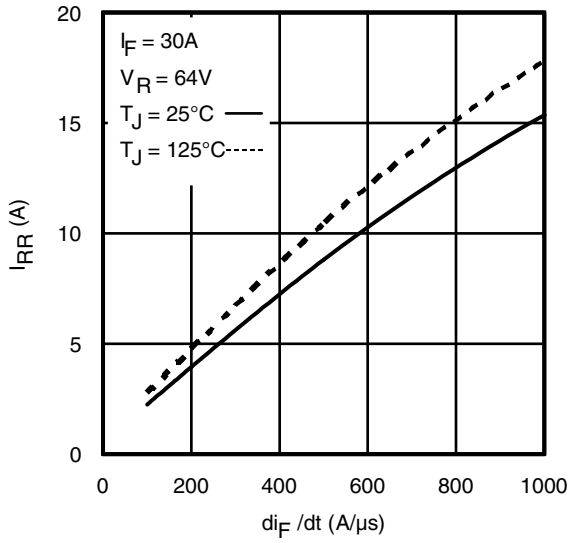

Fig. 17 - Typical Recovery Current vs. di_f/dt

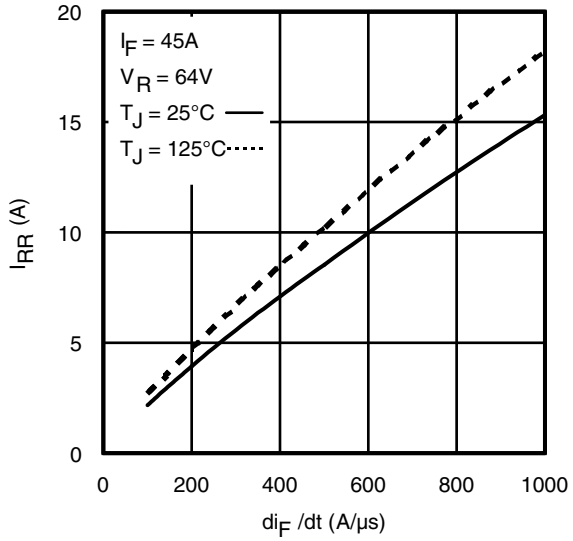

Fig. 18 - Typical Recovery Current vs. di_f/dt

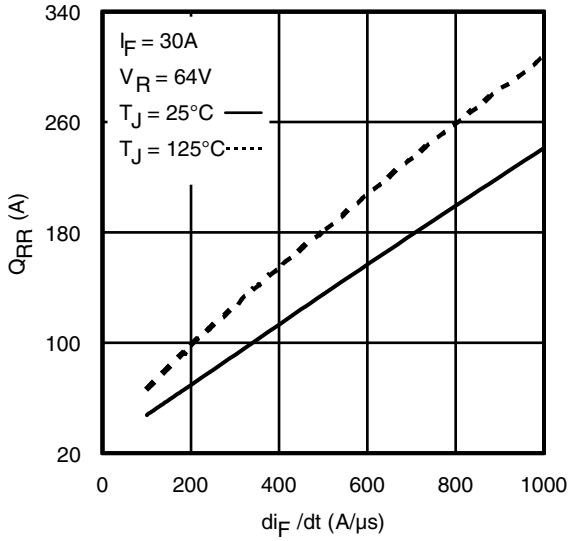

Fig. 19 - Typical Stored Charge vs. di_f/dt

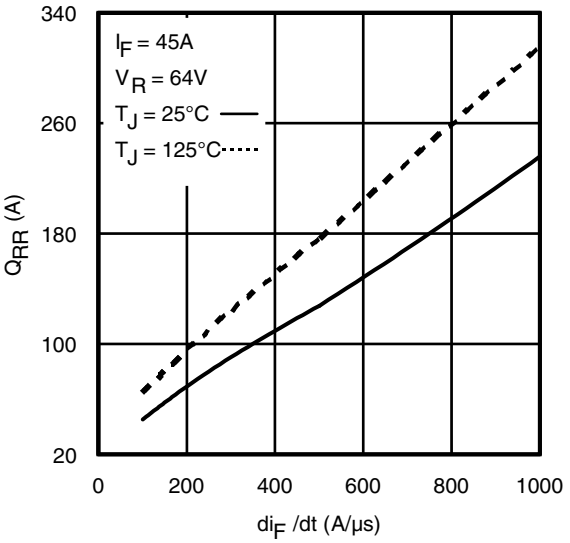

Fig. 20 - Typical Stored Charge vs. di_f/dt

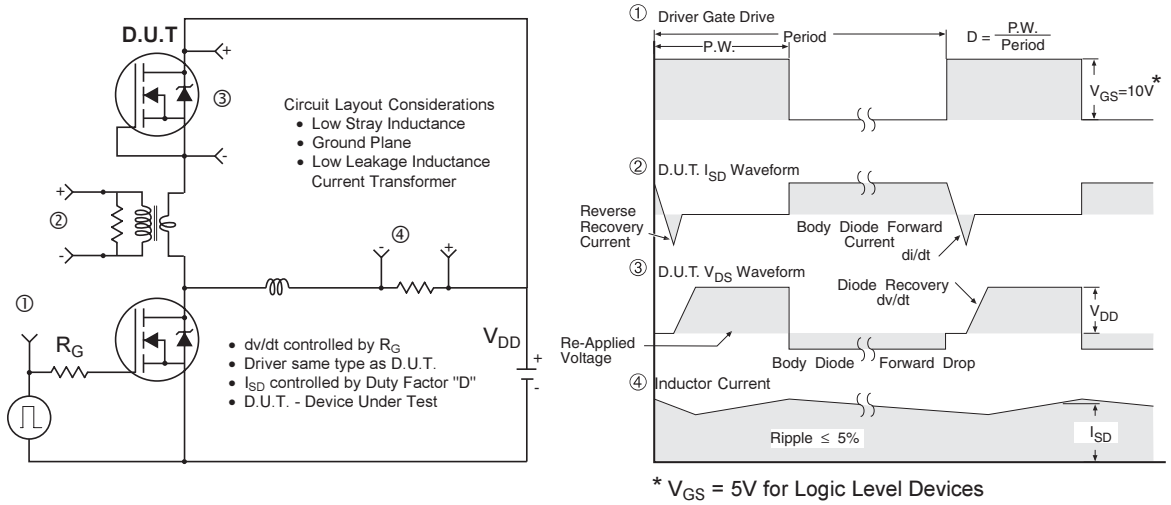

Fig 20. Peak Diode Recovery dv/dt Test Circuit for N-Channel HEXFET® Power MOSFETs

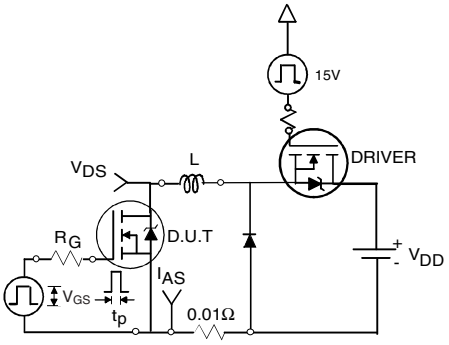

Fig 21a. Unclamped Inductive Test Circuit

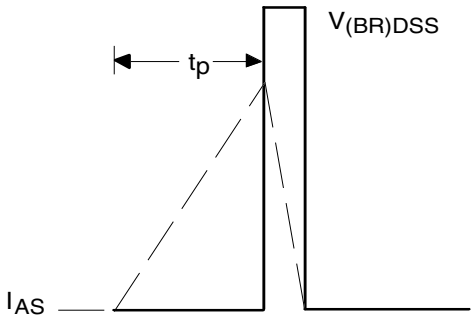

Fig 21b. Unclamped Inductive Waveforms

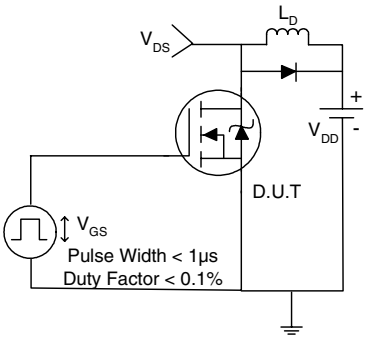

Fig 22a. Switching Time Test Circuit

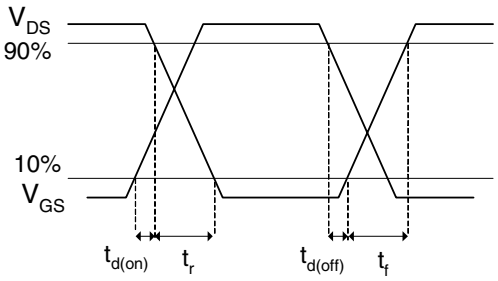

Fig 22b. Switching Time Waveforms

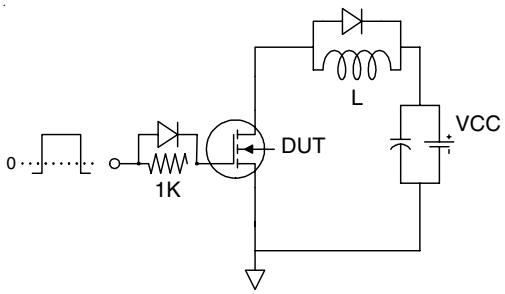

Fig 23a. Gate Charge Test Circuit

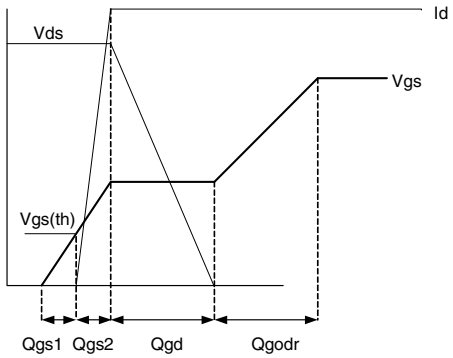

Fig 23b. Gate Charge Waveform

TO-220AB Package Outline (Dimensions are shown in millimeters (inches))

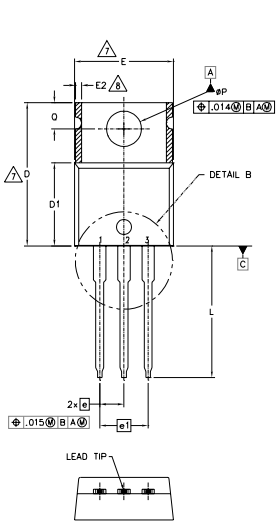

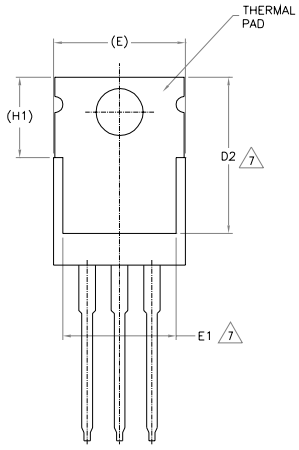

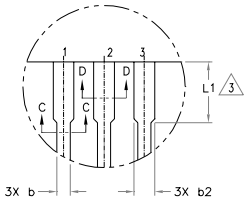

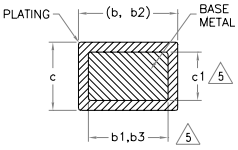

NOTES:

1.– DIMENSIONING AND TOLERANCING AS PER ASME Y14.5 M– 1994.
2.– DIMENSIONS ARE SHOWN IN INCHES [MILLIMETERS].
3.– LEAD DIMENSION AND FINISH UNCONTROLLED IN L1.
4.– DIMENSION D, D1 & E DO NOT INCLUDE MOLD FLASH. MOLD FLASH SHALL NOT EXCEED .005" (0.127) PER SIDE. THESE DIMENSIONS ARE MEASURED AT THE OUTERMOST EXTREMES OF THE PLASTIC BODY.
5.– DIMENSION b1, b3 & c1 APPLY TO BASE METAL ONLY.
6.– CONTROLLING DIMENSION : INCHES.
7.– THERMAL PAD CONTOUR OPTIONAL WITHIN DIMENSIONS E,H1,D2 & E1
8.– DIMENSION E2 X H1 DEFINE A ZONE WHERE STAMPING AND SINGULATION IRREGULARITIES ARE ALLOWED.
9.– OUTLINE CONFORMS TO JEDEC TO-220, EXCEPT A2 (max.) AND D2 (min.) WHERE DIMENSIONS ARE DERIVED FROM THE ACTUAL PACKAGE OUTLINE.

SYMBOL	DIMENSIONS				NOTES
	MILLIMETERS		INCHES		
	MIN.	MAX.	MIN.	MAX.	
A	3.56	4.83	.140	.190	
A1	0.51	1.40	.020	.055	
A2	2.03	2.92	.080	.115	
b	0.38	1.01	.015	.040	
b1	0.38	0.97	.015	.038	5
b2	1.14	1.78	.045	.070	
b3	1.14	1.73	.045	.068	5
c	0.36	0.61	.014	.024	
c1	0.36	0.56	.014	.022	5
D	14.22	16.51	.560	.650	4
D1	8.38	9.02	.330	.355	
D2	11.68	12.88	.460	.507	7
E	9.65	10.67	.380	.420	4,7
E1	6.86	8.89	.270	.350	7
E2	–	0.76	–	.030	8
e	2.54 BSC		.100 BSC		
e1	5.08 BSC		.200 BSC		
H1	5.84	6.86	.230	.270	7,8
L	12.70	14.73	.500	.580	
L1	3.56	4.06	.140	.160	3
øP	3.54	4.08	.139	.161	
Q	2.54	3.42	.100	.135	

LEAD ASSIGNMENTS

HEXFET
1.– GATE
2.– DRAIN
3.– SOURCE

IGBTs, CoPACK
1.– GATE
2.– COLLECTOR
3.– EMITTER

DIODES
1.– ANODE
2.– CATHODE
3.– ANODE

TO-220AB Part Marking Information

EXAMPLE: THIS IS AN IRF1010
LOT CODE 1789
ASSEMBLED ON WW 19, 1997
IN THE ASSEMBLY LINE "C"

Note: "P" in assembly line position indicates "Lead-Free"

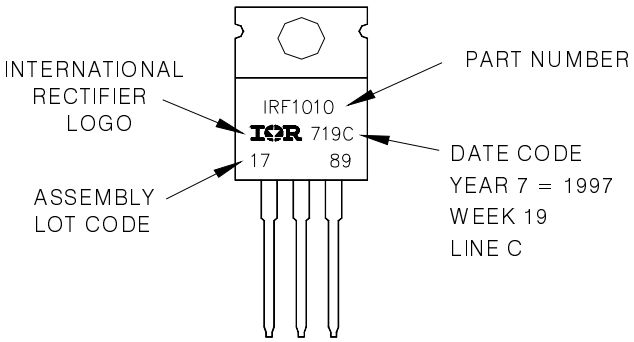

TO-220AB packages are not recommended for Surface Mount Application.

D²Pak (TO-263AB) Package Outline

Dimensions are shown in millimeters (inches)

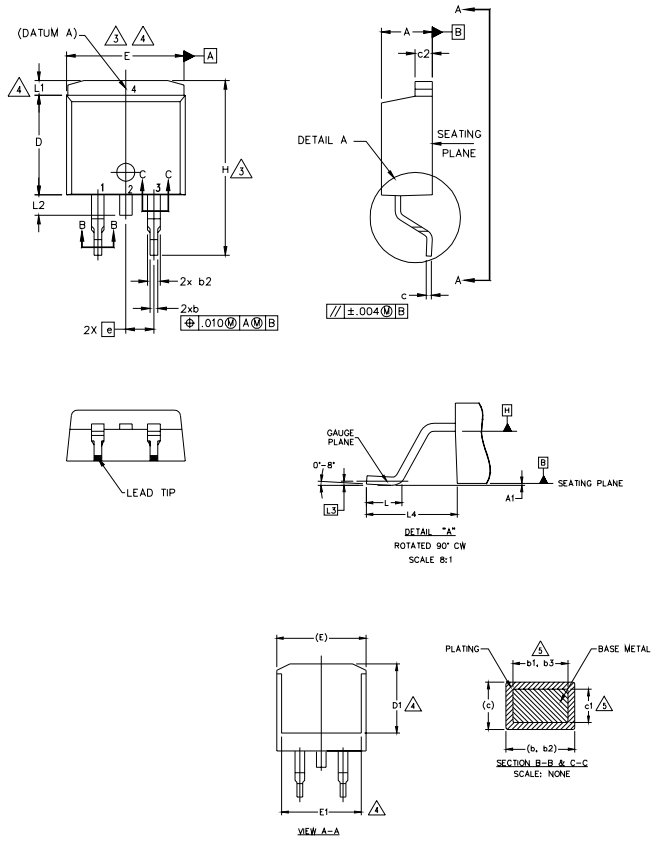

NOTES:

1. DIMENSIONING AND TOLERANCING PER ASME Y14.5M-1994
2. DIMENSIONS ARE SHOWN IN MILLIMETERS [INCHES].
3. DIMENSION D & E DO NOT INCLUDE MOLD FLASH. MOLD FLASH SHALL NOT EXCEED 0.127 [.005"] PER SIDE. THESE DIMENSIONS ARE MEASURED AT THE OUTMOST EXTREMES OF THE PLASTIC BODY AT DATUM H.
4. THERMAL PAD CONTOUR OPTIONAL WITHIN DIMENSION E, L1, D1 & E1.
5. DIMENSION b1 AND c1 APPLY TO BASE METAL ONLY.
6. DATUM A & B TO BE DETERMINED AT DATUM PLANE H.
7. CONTROLLING DIMENSION: INCH.
8. OUTLINE CONFORMS TO JEDEC OUTLINE TO-263AB.

SYMBOL	DIMENSIONS				NOTES
	MILLIMETERS		INCHES		
	MIN.	MAX.	MIN.	MAX.	
A	4.06	4.83	.160	.190	
A1	0.00	0.254	.000	.010	
b	0.51	0.99	.020	.039	
b1	0.51	0.89	.020	.035	5
b2	1.14	1.78	.045	.070	
b3	1.14	1.73	.045	.068	5
c	0.38	0.74	.015	.029	
c1	0.38	0.58	.015	.023	5
c2	1.14	1.65	.045	.065	
D	8.38	9.65	.330	.380	3
D1	6.86	–	.270		4
E	9.65	10.67	.380	.420	3,4
E1	6.22	–	.245		4
e	2.54 BSC		.100 BSC		
H	14.61	15.88	.575	.625	
L	1.78	2.79	.070	.110	
L1	–	1.65	–	.066	4
L2	1.27	1.78	–	.070	
L3	0.25 BSC		.010 BSC		
L4	4.78	5.28	.188	.208	

LEAD ASSIGNMENTS

HEXFET

1.– GATE
2, 4.– DRAIN
3.– SOURCE

IGBTs, CoPACK

1.– GATE
2, 4.– COLLECTOR
3.– EMITTER

DIODES

1.– ANODE *
2, 4.– CATHODE
3.– ANODE

* PART DEPENDENT.

D²Pak (TO-263AB) Part Marking Information

EXAMPLE: THIS IS AN IRF530S WITH
LOT CODE 8024
ASSEMBLED ON WW 02, 2000
IN THE ASSEMBLY LINE "L"

Note: "P" in assembly line position indicates "Lead – Free"

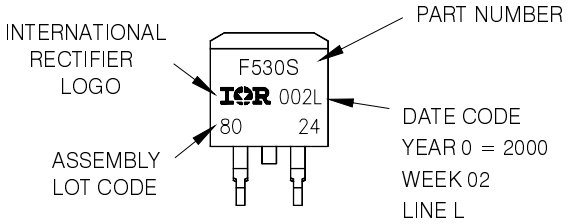

OR

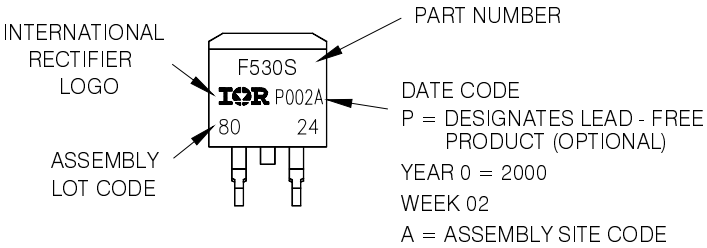

Note: For the most current drawing please refer to IR website at http://www.irf.com/package/pkhexfet.html

TO-262 Package Outline

Dimensions are shown in millimeters (inches)

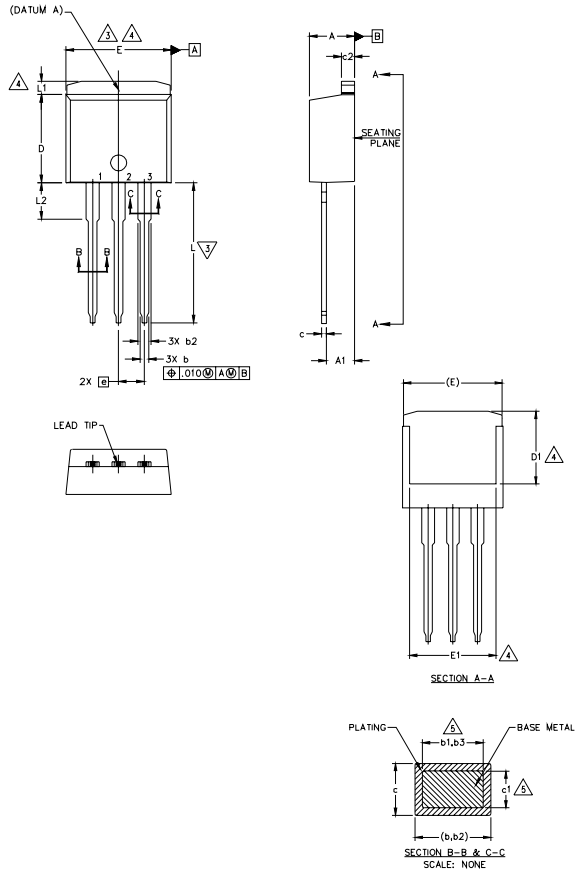

NOTES:

1. DIMENSIONING AND TOLERANCING PER ASME Y14.5M-1994
2. DIMENSIONS ARE SHOWN IN MILLIMETERS [INCHES].
3. DIMENSION D & E DO NOT INCLUDE MOLD FLASH. MOLD FLASH SHALL NOT EXCEED 0.127 [.005"] PER SIDE. THESE DIMENSIONS ARE MEASURED AT THE OUTMOST EXTREMES OF THE PLASTIC BODY.
4. THERMAL PAD CONTOUR OPTIONAL WITHIN DIMENSION E, L1, D1 & E1.
5. DIMENSION b1 AND c1 APPLY TO BASE METAL ONLY.
6. CONTROLLING DIMENSION: INCH.
7.- OUTLINE CONFORM TO JEDEC TO-262 EXCEPT A1(max.), b(min.) AND D1(min.) WHERE DIMENSIONS DERIVED THE ACTUAL PACKAGE OUTLINE.

SYMBOL	DIMENSIONS				NOTES
	MILLIMETERS		INCHES		
	MIN.	MAX.	MIN.	MAX.	
A	4.06	4.83	.160	.190	
A1	2.03	3.02	.080	.119	
b	0.51	0.99	.020	.039	
b1	0.51	0.89	.020	.035	5
b2	1.14	1.78	.045	.070	
b3	1.14	1.73	.045	.068	5
c	0.38	0.74	.015	.029	
c1	0.38	0.58	.015	.023	5
c2	1.14	1.65	.045	.065	
D	8.38	9.65	.330	.380	3
D1	6.86	–	.270	–	4
E	9.65	10.67	.380	.420	3,4
E1	6.22	–	.245		4
e	2.54 BSC		.100 BSC		
L	13.46	14.10	.530	.555	
L1	–	1.65	–	.065	4
L2	3.56	3.71	.140	.146	

LEAD ASSIGNMENTS

HEXFET

1.- GATE
2.- DRAIN
3.- SOURCE
4.- DRAIN

IGBTs, CoPACK

1.- GATE
2.- COLLECTOR
3.- EMITTER
4.- COLLECTOR

TO-262 Part Marking Information

EXAMPLE: THIS IS AN IRL3103L
LOT CODE 1789
ASSEMBLED ON WW 19, 1997
IN THE ASSEMBLY LINE "C"

Note: "P" in assembly line position indicates "Lead - Free"

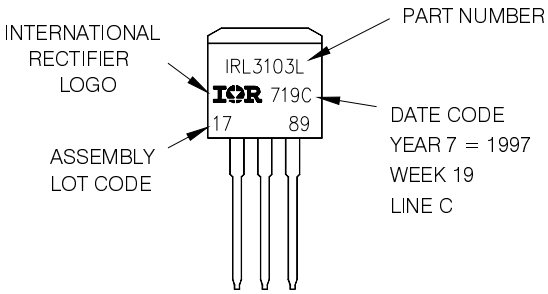

OR

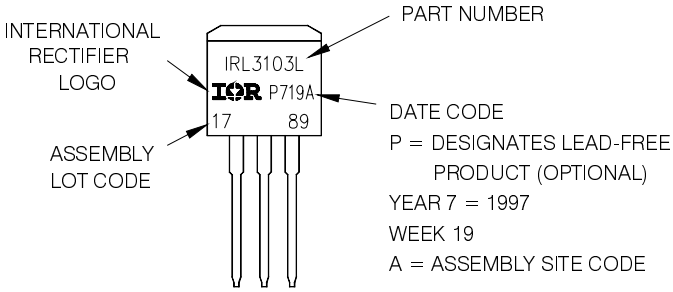

Note: For the most current drawing please refer to IR website at http://www.irf.com/package/pkhexfet.html

D²Pak (TO-263AB) Tape & Reel Information

Dimensions are shown in millimeters (inches)

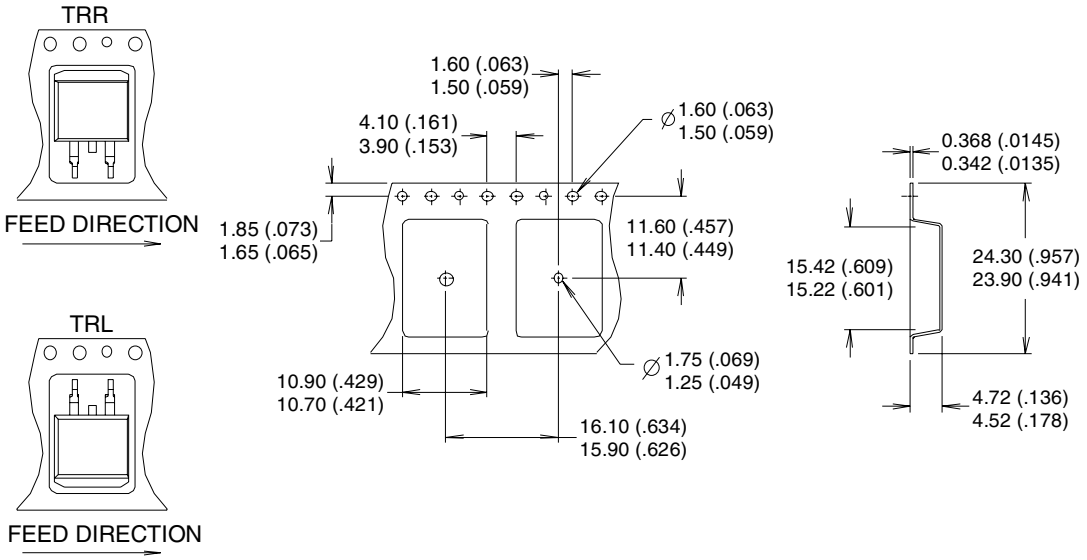

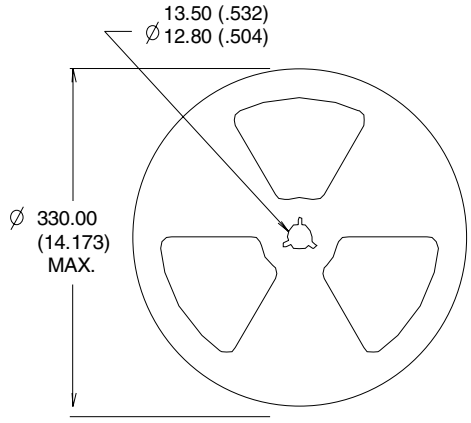

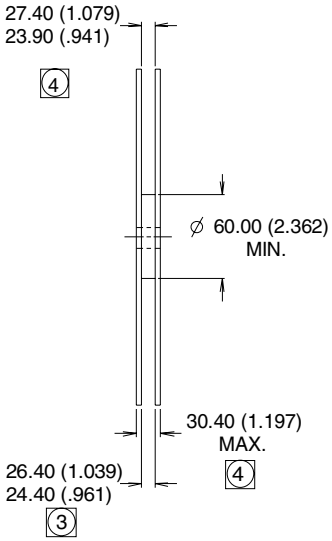

NOTES :
1. COMFORMS TO EIA-418.
2. CONTROLLING DIMENSION: MILLIMETER.
3. DIMENSION MEASURED @ HUB.
4. INCLUDES FLANGE DISTORTION @ OUTER EDGE.

Note: For the most current drawing please refer to IR website at http://www.irf.com/package/pkhexfet.html

Data and specifications subject to change without notice.
This product has been designed and qualified for the Industrial market.
Qualification Standards can be found on IR's Web site.

International
IOR Rectifier

IR WORLD HEADQUARTERS: 233 Kansas St., El Segundo, California 90245, USA Tel: (310) 252-7105
TAC Fax: (310) 252-7903
Visit us at www.irf.com for sales contact information. 04/08